SPECIAL PACKAGING INSTRUCTIONS

CODE ID	SPI NO. (TPO)
98752	01-240-4224
	SHEET 1 OF 3

PART OR DRAWING NO.	NATIONAL STOCK NO.	CURRENT REV
0064001-5	5985-01-240-4224EW	

ITEM NOMENCLATURE	ORIGINAL DATE
ANTENNA	89138

ILL J. WILLCOX
CHK C. MALOY
ENG J. MCLEOD
AUTH L. D. ADAMS

AIR FORCE WARNER ROBINS 86 ALC DSTL APPROVED PACKAGING

PRESERVATION

LEVEL A METHOD IIB
LEVEL B METHOD IIB
LEVEL C OMIT P/N'S 7 & 8

ICQ
QUP 1
CLEANING IAW MIL-P-116
DRYING IAW MIL-P-116
PRESERVATIVE N/A

MARKING IAW MIL-STD-129

SPECIAL MARKING:
A) SPI NO.01-240-4224
B) REUSABLE CONTAINER
DO NOT DESTROY
C) METHOD II MARKINGS REQ

PACKING AS SPECIFIED BELOW AND BILL OF MATERIAL

LEVEL	SPEC	STYLE	TYPE	CL	VAR	GRADE
A	PPP-B-601	A	O/S			B
B	PPP-B-636	RSC	CF	WR	DW	V15C
C	PPP-B-636	RSC	CF	WR	DW	V15C

	LEVEL A	LEVEL B	LEVEL C
GROSS CU FT	7.33	6.19	6.19
GROSS WT LBS	110	89	89
DESIGN FRAG. G'S	35	35	35

	LENGTH	WIDTH	DEPTH
CNTNR I.D.	27 1/8	13 3/4	25
CNTNR O.D.	27 7/8	14 1/2	26 1/2
ITEM DIM	22 1/4	9	18 1/2

ITEM WT LBS 74

PART NO.	QTY REQ'D	NOMENCLATURE OR DESCRIPTION	SIZE	MATERIAL SPECIFICATION
17	A/R	ADHESIVE	FOR LAMINATION	MMM-A-1617 <8>
16	A/R	FELT	1/4 THICK	C-F-206 <8>
15	1	TOP COVER	20 1/4 X 9 X 3 ID	PPP-F-320 CF DOM SW <3><8>
14	A/R	TAPE CONTAINER	REINFORCEMENT	PPP-T-97 TY IV <6>
13	A/R	TAPE CONTAINER	CLOSURE AND SEALING	PPP-T-60 TY III CL 1
12	A/R	ADHESIVE	FOR LAMINATION	MMM-A-250 <5>
11	2	CUSHIONING TOP/BOT	23 1/8 X 13 3/4 X 2	MIL-P-26514 TY I CL 2 GR C
				DEN 2.0 PCF
10	2	CUSHIONING SIDES	23 1/8 X 21 X 2	MIL-P-26514 TY I CL 2 GR C
				DEN 2.0 PCF
9	2	CUSHIONING ENDS	13 3/4 X 25 X 2	MIL-P-26514 TY I CL 2 GR C
				DEN 2.0 PCF
8	64	UNITS DESICCANT		MIL-D-3464 TY II <6>
7	1	BAG BARRIER	32 X 47	MIL-B-117 TY I CL E STY 1
6	1	ITEM WRAP	57 X 43	L-P-378 TY I CL 1 GR A FIN
				1
5	2	SIDE INSERTS	18 3/8 X 9 5/8 X 1 1/4	PPP-F-320 CF DOM <4><5>
4	2	END INSERTS	9 5/8 X 7 7/8 X 7/8	PPP-F-320 CF DOM <4><5>
3	1	BOTTOM SLEEVE	22 3/8 X 9 X 9 5/8 OD TW	PPP-F-320 CF DOM <3><4><5>
2	1	INTERIOR CONTAINER	22 3/8 X 9 X 19 3/4 ID	PPP-B-636 RSC CF DOM SW GR
				275 <3>
1	1	EXTERIOR CONTAINER		SEE PACKING

SPI NO. 01-240-4224

DD: form Jan 86 2169 MOD

SPECIAL PACKAGING INSTRUCTIONS	CODE ID 98752	SPI NO. (TPO) 01-240-4224
ITEM NOMENCLATURE ANTENNA		SHEET 2 OF 3

NOTES:

1. CONTAINER CLOSURE, SEALING AND REINFORCEMENT SHALL BE IAW APPLICABLE SPECIFICATION, EXCEPT TOP FLAPS FOR FIBERBOARD SHALL BE CLOSED WITH TAPE IN LIEU OF ADHESIVE.

2. REPAIRABLES SHALL BE PACKAGED AS SHOWN HEREON. LEVEL C/C SHALL APPLY.

3. MARK P/N'S 2, 3, & 15 WITH SPI NUMBER. USE METHODS AND MATERIALS PRESCRIBED IN MIL-STD-129/130.

4. ARROW INDICATES FLUTE DIRECTION ON P/N'S 3, 4 & 5.

5. USE ADHESIVE P/N 12 TO LAMINATE P/N'S 4 & 5 TO DESIRED THICKNESS AND LAMINATE P/N'S 4 & 5 TO P/N 3 AS SHOWN IN DETAIL.

6. USE P/N 14 TO TAPE DESICCANT IN VOID BEFORE APPLYING BARRIER BAG.

7. OD REFLECTED ON THESE INSTRUCTIONS REPRESENT LEVEL B PACKING.

8. USE P/N 17 TO SECURE P/N 16 TO INTERIOR OF P/N 15.

SPECIAL PACKAGING INSTRUCTIONS	CODE ID 98752	SPI NO. (TPO) 01-240-4224
ITEM NOMENCLATURE ANTENNA		SHEET 3 OF 3

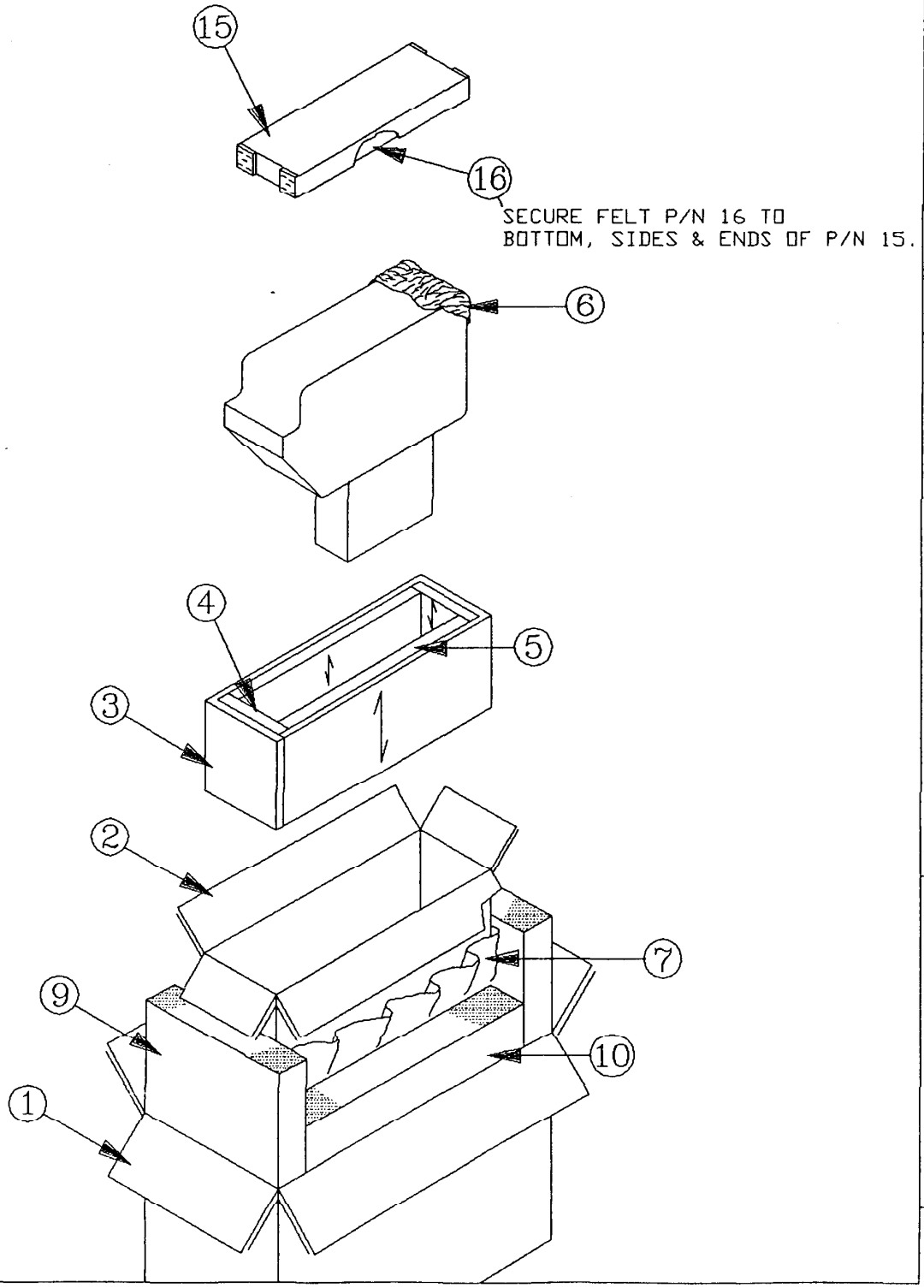

SPI NO. 01-240-4224

DD form 1 Jan 86 2169c MOD